ATC Drop-In Pedestals for ShopSabre Install Guide

This guide is intended to outline the steps to install your Portland CNC Modular ATC Pedestal Upgrade (not Drop-in). The most updated, detailed, & media-rich version is on our Helpdesk: pdxcnc.com/atc-install 👉

> 🚨 **Disclaimer:** We've done our best to give you the best guide we can. Every machine can have slight differences – be aware and adapt. **DO NOT blindly trust our guides - think through each step yourself!**

👋 ***Skim the whole guide before starting!***

Expected time: 1-2 hrs

You'll Need: 🅿️ = PDX CNC provided

- ☐ **3/16", 3*, 4, 5, 6mm Allen Wrenches** 🅿️
- ☐ **Any Old Tool Holder**

---

1) Measure Tools

Before removing your ATC Rack or Tool Probe

Have one Measured Tool using your existing Tool Height Probe:

- *Any 2, or 3 flute or drill will work. Don't use a fly cutter or insert tool.*

2) Backup your WinCNC Folder

- Open `C:\WinCNC` on your CNC PC.
- Copy this folder and Paste it somewhere safe. E.G. – A USB flash drive or your Desktop.
- Then rename it to `WinCNC - BACKUP`.

2) Remove Existing ATC Tool Rack & Z-Probe

- Unbolt and remove old rack.
- Find awkward place in your shop for these large piece(s) of metal.

3) Assemble Parts

(Tools needed: 3/16”, 4, 5, 6mm Allen wrenches)

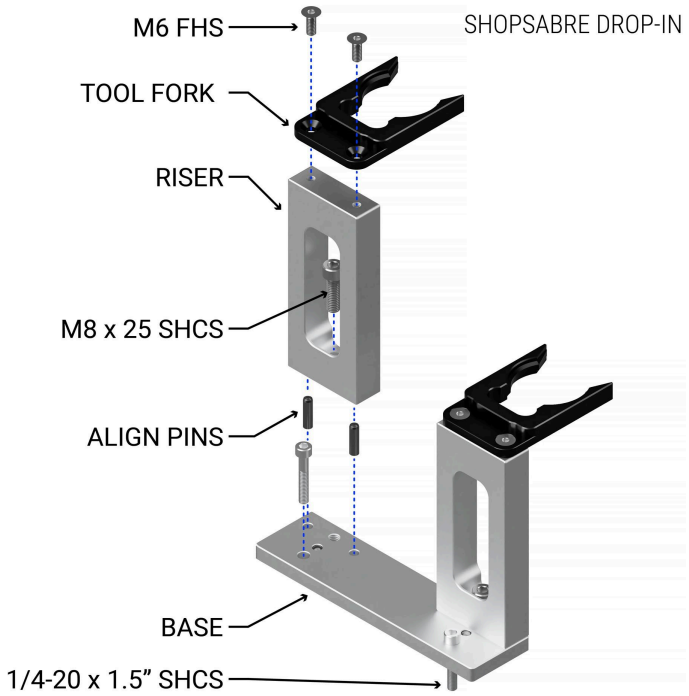

A) Attach Bases to Table

- Orient Base labeled **A** on left most side with Letter on X- (left).
- Align Pedestal Base “Slots” with holes used to bolt old rack.
- Use 3/16 Allen wrench to loosely attach 1/4-20 SHCS into holes used for old rack.
- Repeat loose screw method for Base **B** to the right of **A**. It should slide right up next to A.
- *If you have 10 positions:*
    - Continue with the same methods to add Base **C** to the right of **B** followed by Base **D** to the right of **C**.
- Pull all Bases to the Y- side and tight touching each other. Tighten down ¼-20 SHCS to table.

B) Attach Risers to Bases

- Use **1ct - M8 SHCS** & **2ct - 5mm** dowel pins per Riser.
- Insert Dowel Pins into Base, then drop Riser onto dowel Pins with logo facing Y+.
- Use 6mm Allen wrench with ball end to tighten each Riser to its Base.
- Use the short end of Allen wrench for a bit more torque. Hand snug is good.

C) Attach Forks to Risers

- Use **2ct - 6mm Flat Head Screws** to attach **1ct - ISO30 Tool Fork** to each Riser.
- Tool Fork should be open towards Y+ or the back of the machine.

- Snug each screw down, no need for heavy force.
- The extra white Tool Fork is a “Spare Tire” in case you break one. *We sell ATC Forks on our Shop* 😉 *atcpedestal.com*

D) Attach Z-Probe Stand to Base A

- Use **2ct - 5mm Dowel Pins** into the Left end of Base A.
- Drop Z-Probe Stand on top of pins
- Attach with **M6 SHCS** (1 or 2ct depending on style)
- *If your probe wire does not reach to new location you may need to hand-drill a new hole in the table to create a better path.*

E) Attach Z-Probe to Probe Stand

- Depending on your Probe model:
  - **ALU Rectangle Probe** - Use previous screws to attach to stand
  - **Cylinder Body Probe** - Use provided **2ct - M4 SHCS** (3mm Allen wrench)

4) Change Z-Probe Position – pdxcnc.com/atc-install#probe

Your Z-probe is now in a new position. You need to tell WinCNC where that is.
After changing and saving WinCNC files, restart WinCNC. Homing will be required after.

5) Calibrate Positions – pdxcnc.com/atc-install#calibrate

Changing ATC tool positions will impact tool changes. Our self-centering ATC Forks and precision dowel pin-aligned Bases, and Risers prevent position shifting. When installing, ensure each position aligns where the machine expects it by following a deliberate jogging procedure. There is now 5.75” space between positions (original 6”)



6) Tool Height All Tools

After moving your Tool Height Probe you want to make sure to re-height every tool. During the first auto-tool heighting, make sure everything clears as expected. Hover over ESC or E-stop. Try to tool change each position with a dummy tool.



- *Need help? Email us –* help@portlandcnc.com
- *If you’re in a dire situation give us a call, please leave a voicemail* – 971-444-5673

Visit our Shop for an ever-growing list of CNC tools and supplies – pdxcnc.com 👉